Published: 11-May-2011

Manual Transmission / Transaxle and Clutch - General Information -

Troque Specifications

Description	NM	lb-ft
Clutch bleed screw	10	7
Transmission heat shield bolts	10	7

transmissionmanuals.com

Published: 11-May-2011

Manual Transmission / Transaxle and Clutch - General Information - Clutch System Bleeding

General Procedures

1. WARNING: Do not work on or under a vehicle supported only by a jack. Always support the vehicle on safety stands.

Raise and support the vehicle.

2. Remove the transmission undershield.

- Remove the 6 bolts.

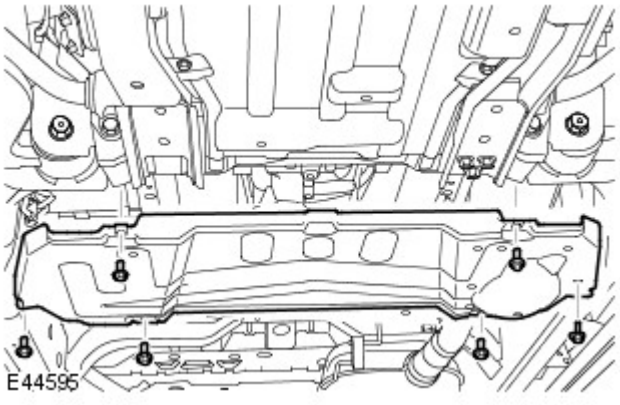

3. Check that all the clutch line connections are tight and that there are no signs of leaks.

4. Remove the brake master cylinder cover.

- Release the 3 clips.

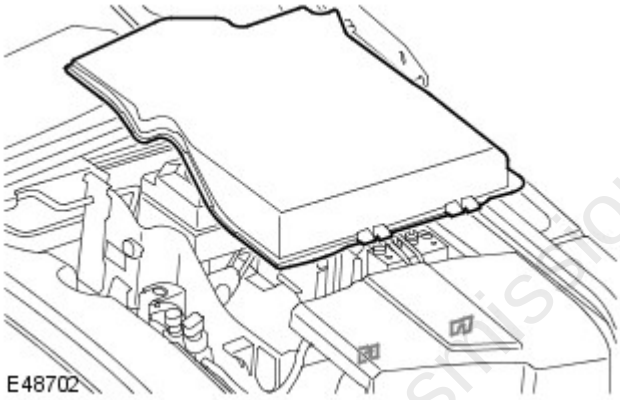

5. WARNING: Do not allow dirt or foreign liquids to enter the reservoir. Use only new Shell DOT 4 ESL brake fluid from airtight containers. Do not mix brands of brake fluid as they may not be compatible.

CAUTION: Brake fluid will damage paint finished surfaces. If spilled, immediately remove the fluid and clean the area with water.

Fill the brake fluid reservoir.

- Remove the filler cap.

6. Attach the bleed tube to the clutch bleed screw and immerse the free end of the bleed tube in a bleed jar containing a small quantity of approved brake fluid.

transmissionmanuals.com



7. Loosen the bleed screw by one-half turn.

8. CAUTION: The brake fluid reservoir must remain full with new, clean brake fluid at all times during bleeding.

• NOTE: It may be necessary to physically return the pedal to the start position.

Depress the clutch pedal steadily through its full stroke and return to the rest position. Repeat the procedure until a flow of clean, air-free fluid is being pumped into the bleed jar.

9. CAUTION: Make sure the bleed screw cap is installed after bleeding. This will prevent corrosion to the bleed screw.

With the clutch pedal fully depressed, tighten the bleed screw to 10 Nm (7 lb.ft).

10. Fill the brake fluid reservoir.

- Install the filler cap.

11. Operate the clutch pedal and check for leaks.

12. Install the cover.

13. Install the transmission heat shield.

- Tighten the bolts to 10 Nm (7 lb.ft).

transmissionmanuals.com